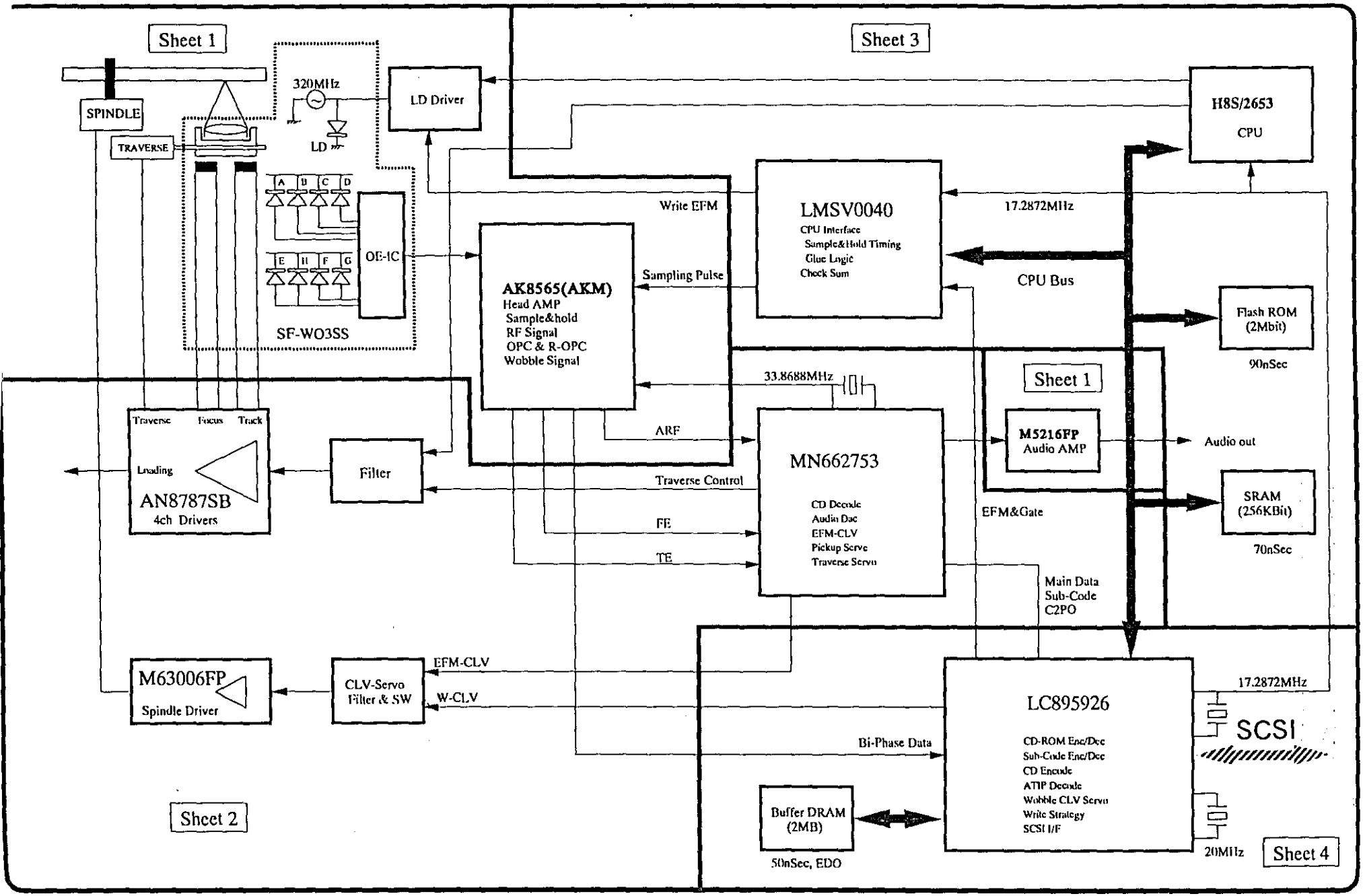Schematic Diagram of MKE CD-R (CW-7503-B)